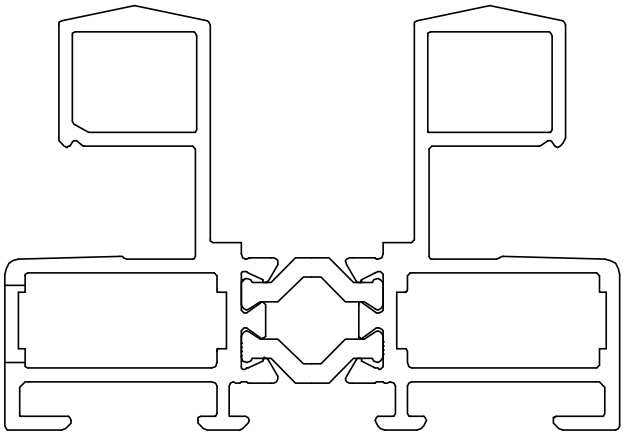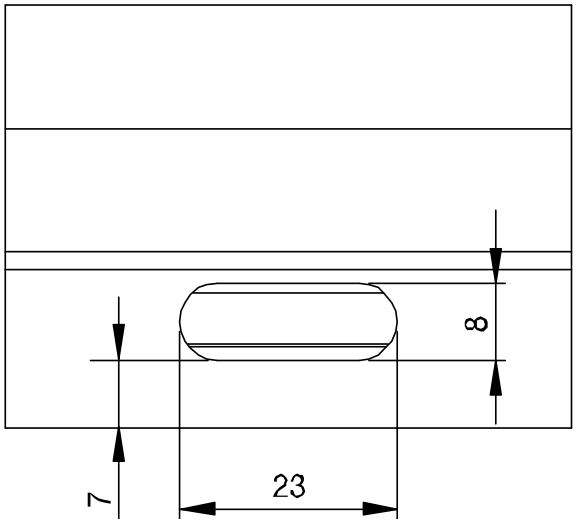A296047